REVISIONS			
LTR	DESCRIPTION	DATE	APPVD

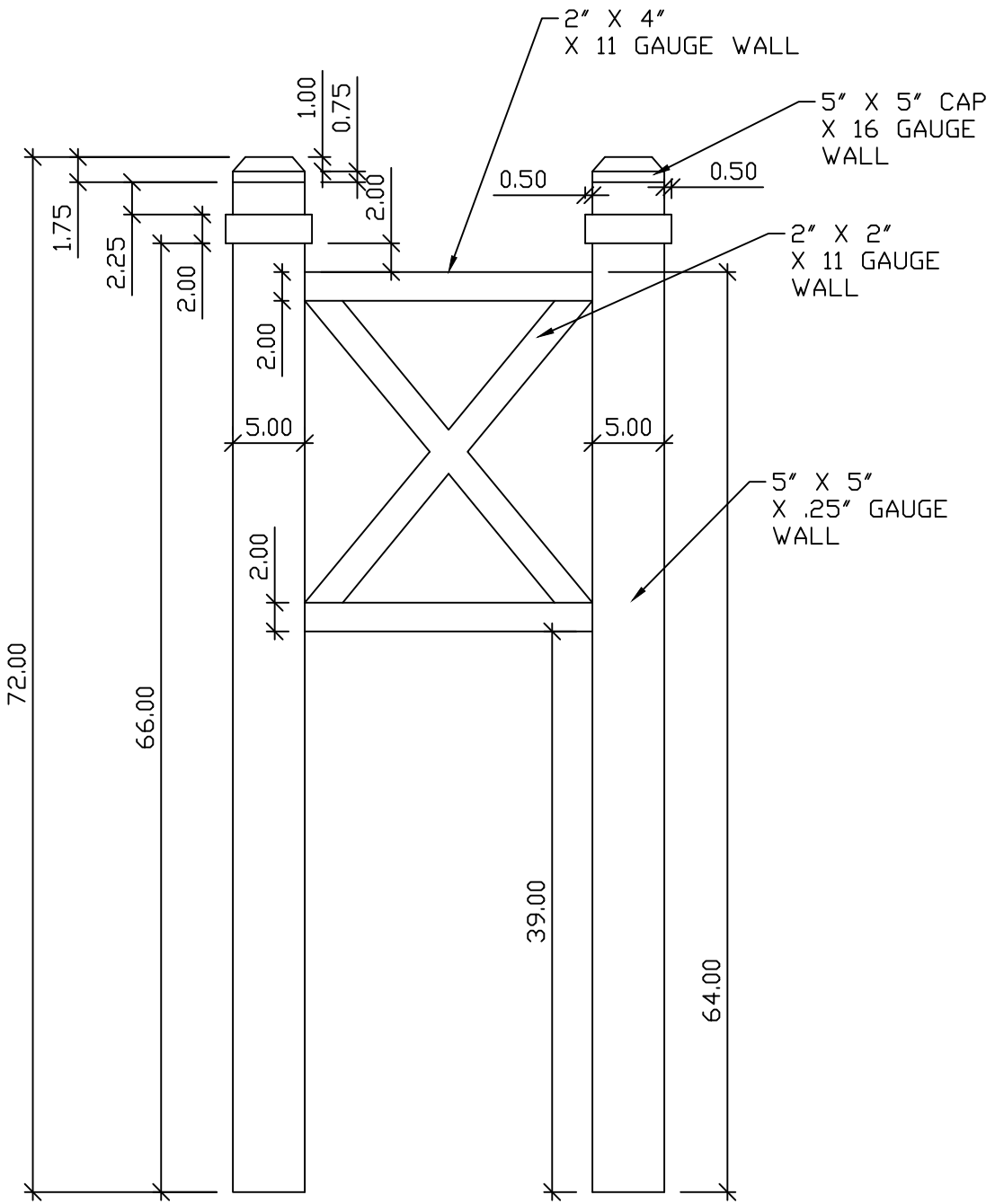

APPLICATION	
NEXT ASSY	USED ON

SERIES NUMBER:	XF6040F	CAGE CODE	SIZE	DRAWING NUMBER:
PRODUCT FAMILY:	FIXED BOLLARD			
PRODUCT CLASS:	STANDARD OR CUSTOMER DEFINED	DRAWN BY:	MJW	DRAWING REV:
PRODUCT LINE:		CHECKED BY:		SHEET: 1 OF 1
PRODUCT SUB LINE:		APPROVED BY:		RELEASE DATE:

1-800-BOLLARDS, Inc.
24370 Northwestern Hwy, Suite 250
Southfield, MI. 48075
PHONE: 1-800-BOLLARDS
WEB: WWW.1800BOLLARDS.COM
EMAIL: INFO@1800BOLLARDS.COM

TITLE:
XF6040F